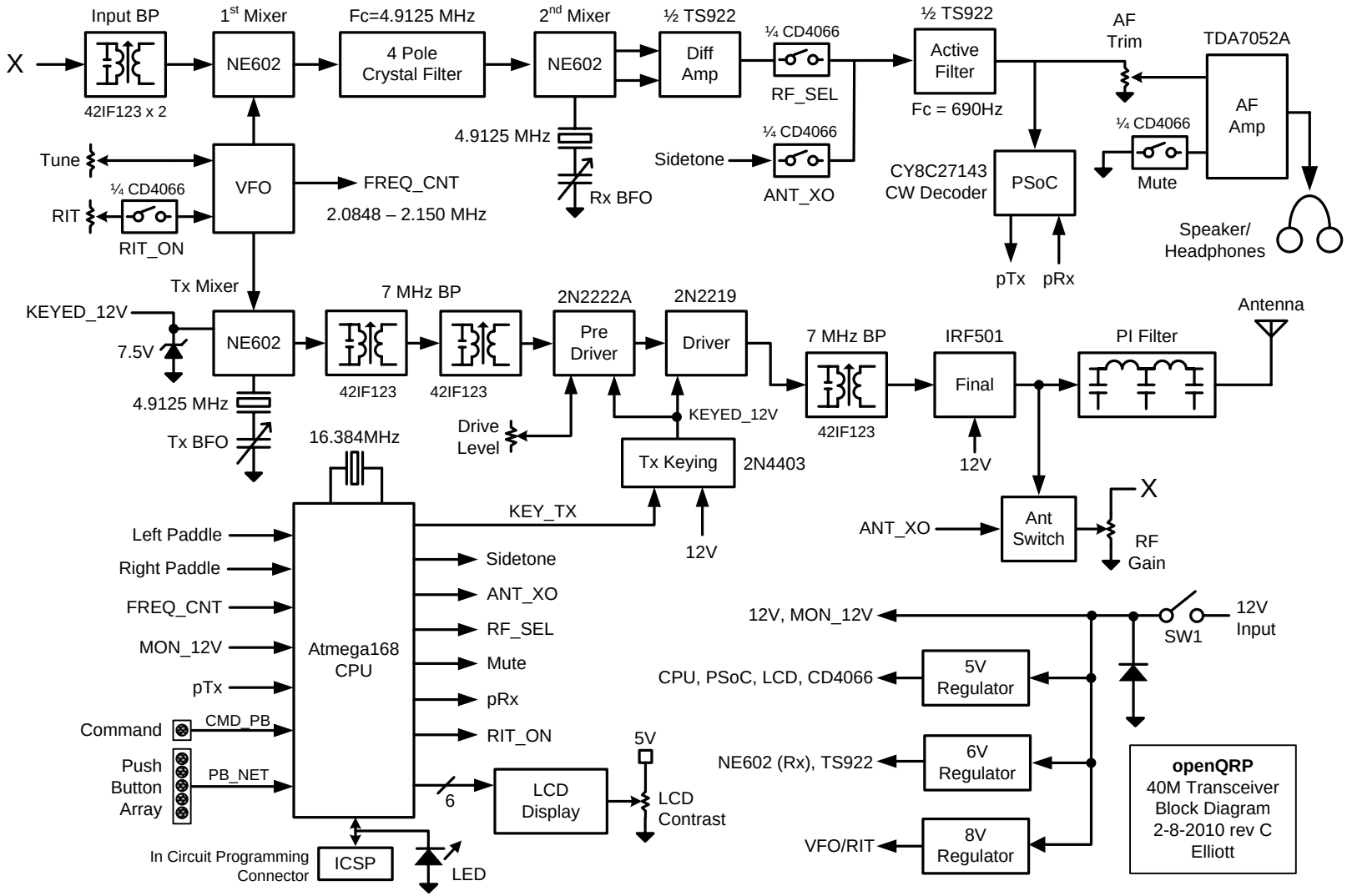
X
Input BP
42IF123 x 2
1st Mixer
NE602
Fc=4.9125 MHz
4 Pole
Crystal Filter
2nd Mixer
NE602
½ TS922
Diff
Amp
¼ CD4066
RF_SEL
½ TS922
Active
Filter
Fc = 690Hz
AF
Trim
TDA7052A
AF
Amp
¼ CD4066
Mute
Speaker/
Headphones
4.9125 MHz
Rx BFO
Sidetone
¼ CD4066
ANT_XO
CY8C27143
CW Decoder
PSoC
pTx
pRx
Tune
¼ CD4066
RIT
RIT_ON
VFO
FREQ_CNT
2.0848 – 2.150 MHz
Tx Mixer
KEYED_12V
7.5V
NE602
7 MHz BP
42IF123
42IF123
2N2222A
Pre
Driver
2N2219
Driver
7 MHz BP
42IF123
IRF501
Final
12V
PI Filter
Antenna
4.9125 MHz
Tx BFO
16.384MHz
Drive
Level
KEYED_12V
Tx Keying
2N4403
12V
KEY_TX
ANT_XO
Ant
Switch
X
RF
Gain
Left Paddle
Right Paddle
FREQ_CNT
MON_12V
pTx
Command
CMD_PB
Push
Button
Array
PB_NET
Atmega168
CPU
Sidetone
ANT_XO
RF_SEL
Mute
pRx
RIT_ON
6
LCD
Display
5V
LCD
Contrast
In Circuit Programming
Connector
ICSP
LED
12V, MON_12V
SW1
12V
Input
CPU, PSoC, LCD, CD4066
5V
Regulator
NE602 (Rx), TS922
6V
Regulator
VFO/RIT
8V
Regulator
openQRP
40M Transceiver
Block Diagram
2-8-2010 rev C
Elliott